A650

(Bateria)

Lavadora Automática de Piso
Manual de Peças

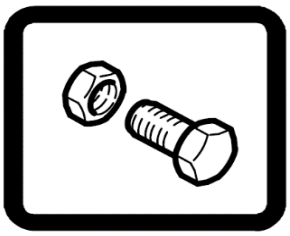

Criando um mundo
mais limpo, seguro e saudável

Peças Originais Alfa

Brasil / América do Sul

Para os mais recentes manuais de peças e outros manuais de operação, visite:

www.alfatennant.com.br/manuais

Rev. 00 (07/2023)

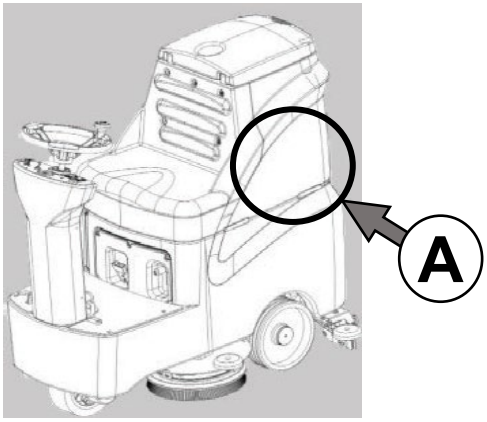

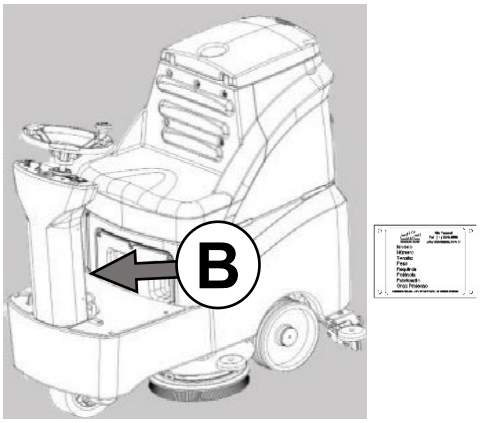

Ref	Código	Número de Série	Descrição	Qtd
1	FX15010	(0170001-)	MOTOR ELETRICO MONO K FOX	1
▽ 2	FX14050	(0170001-)	CONJ POLIA-ARRASTADORA FOX	1
▲ 3	FX14051	(0170001-)	POLIA ARRASTADORA FOX	1
	MT30004	(0170001-)	ANEL ELAST E-15	3
	MT16019	(0170001-0170354)	SUPORTE GUIA MOLA	2
6	MT44003	(0170001-)	PARAF SCSI M8X8	4

D

C

COMO FAZER O PEDIDO DE PEÇAS - veja o diagrama acima

Só use **Peças Originais Alfa**.

Siga os passos abaixo para garantir uma entrega rápida.

1. **(A)** Identifique o modelo da máquina.
2. **(B)** Identifique o número de série da máquina que se encontra na etiqueta de dados.
3. **(C)** Certifique- se de que usa o número de série correto da lista de peças.
4. Identifique o código da peça e a quantidade. Não encomende através de números de página ou de referência.
5. Forneça instruções de entrega detalhadas.

(D)	▽	identifica um conjunto
	▲	Identifica peças incluídas em um conjunto

Alfa Tennant - Brasil
Sociedade Alfa Ltda
Rua Barão de Campinas, 715
Campos Elíseos, São Paulo, SP
Cep.: 01201-902
Tel: (11) 3320-8550
Assist Tec: (11) 3320-8555
SAC: (11) 3320-8552
www.alfatennant.com.br

Especificações e peças estão sujeitas a alterações sem aviso prévio.
Direitos autorais Sociedade Alfa Ltda, impresso no Brasil.

ÍNDICE

Ref	Descrição	Página
1	CHASSI 1 DE 2	4
2	CHASSI 2 DE 2	6
3	PAINEL ELÉTRICO	8
4	PAINEL 1 DE 3	10
5	TRAÇÃO	12
6	PAINEL 2 DE 3	14
7	PAINEL 3 DE 3	16
8	TANQUE SOLUÇÃO	18
9	BASE, COBERTURA, ESCOVA	20
10	FILTRO	22
11	ASPIRAÇÃO	24
12	TANQUE RECOLHIMENTO	26
13	SUPORTE RODO	28
14	RODO	30

CHASSI 1 DE 2

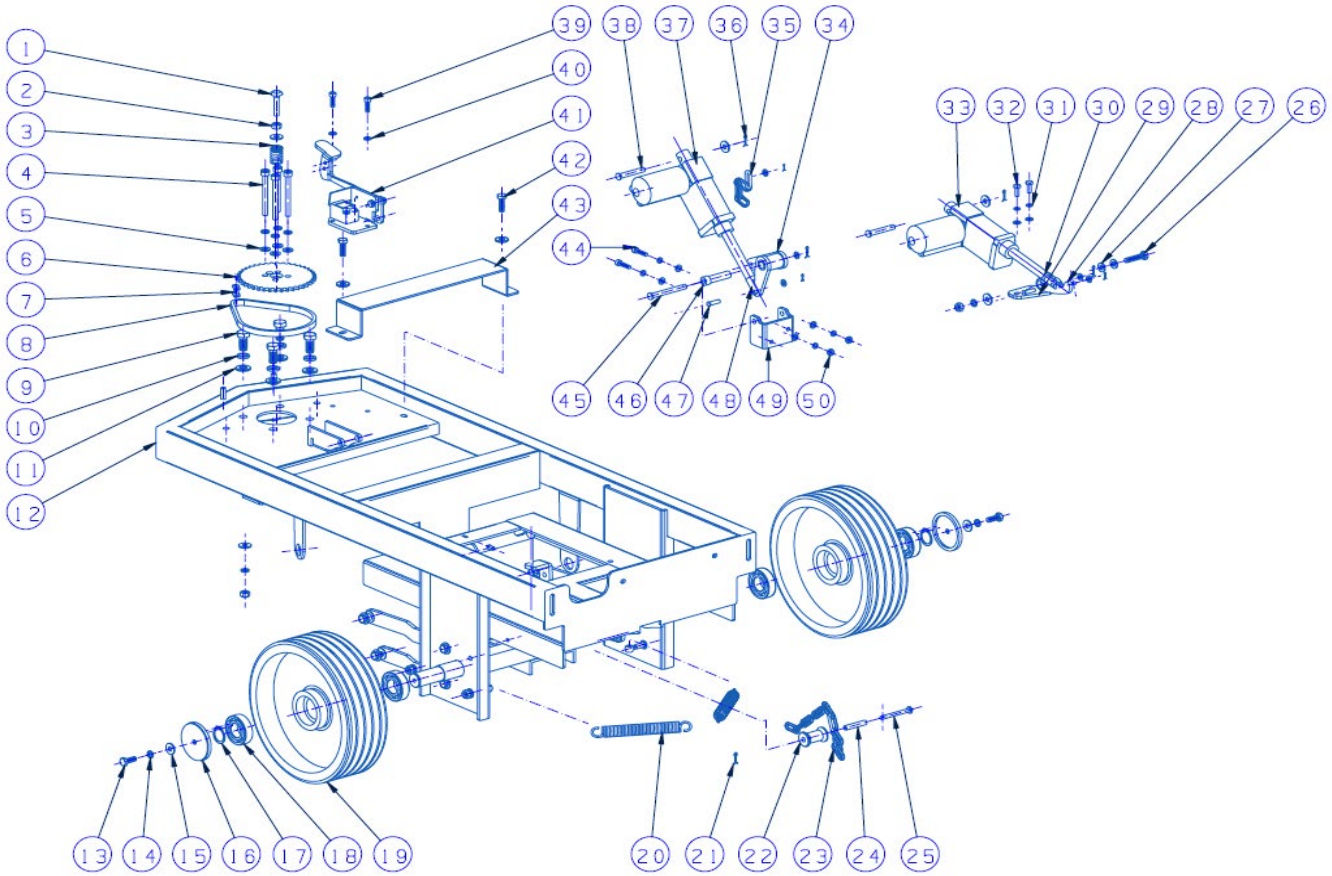
1
2
3
4
5
6
7
8
9
10
11
12
13
14
15
16
17
18
19
20
21
22
23
24
25
26
27
28
29
30
31
32
33
34
35
36
37
38
39
40
41
42
43
44
45
46
47
48
49
50

CHASSI 1 DE 2

Ref	Código	Número de Série	Descrição	Qtd
1	CN4000100	(00001-)	M8*40 square neck screw	1
2	CN4000330	(00001-)	M8 self-locking nut	4
3	CN5001237	(00001-)	Mini brake spring, GMmini black	1
4	CN4000131	(00001-)	M8 * 75 socket head	4
5	CN4000373	(00001-)	M8 gasket, ¢8.4*¢16*1mm	9
6	CN5000920	(00001-)	Turn to big sprocket, GM110 A3 40	1
7	CN4000769	(00001-)	3-point chain joint GM110	1
8	CN4001060	(00001-)	GM110 overall front steering chain	1
9	CN4000146	(00001-)	M12 x 25 hex	4
10	CN4000408	(00001-)	M12 pad, stainless steel	4
11	CN4000377	(00001-)	M12 stainless steel gasket	4
12	CN5000223	(00001-)	Mini main frame, GMmini	1
13	CN4000093	(00001-)	M8 * 20 hex	2
14	CN4000406	(00001-)	M8 play mat	9
15	CN4000374	(00001-)	M8 increase the gasket	9
16	CN5002147	(00001-)	GM230 rear cover, GM230	2
17	CN4000485	(00001-)	25 ¢shaft card	2
18	CN4000518	(00001-)	Bearing 6205, 6205	4
19	CN5005251	(00001-)	GMmini aluminum rear wheel	2
20	CN5001236	(00001-)	Mini steerage steering spring	2
21	CN4000868	(00001-)	¢2X20, ¢2	4
22	CN5000929	(00001-)	Zip pulley, GM110	1
23	CN5000271	(00001-)	GMmini pick chain, GMmini	1
24	CN5001382	(00001-)	Zip pulley bushing, ¢8X¢6X41mm	1
25	CN4000872	(00001-)	Pin ¢6X55	1
26	CN4000067	(00001-)	M6 * 35 hex	1
27	CN5000954	(00001-)	Push rod lever copper bushing	1
28	CN5000180	(00001-)	Pull open and close lever, GM110	1
29	CN5000204	(00001-)	Pull open and close base, GM110	1
30	CN4000329	(00001-)	M8 nut	1
31	CN4000405	(00001-)	M6 play mat	6
32	CN4000065	(00001-)	M6 * 16 hex	2
33	CN5003084	(00001-)	Rear-push rod wiring harness assembly	1
34	CN5000254	(00001-)	Mini brush head push rod arm (welding)	1
35	CN5000256	(00001-)	Mini brush head chain, GMmini	1
36	CN4000869	(00001-)	¢3X15, ¢3	4
37	CN5003083	(00001-)	Front push rod wire harness assembly	1
38	CN4000871	(00001-)	Ganizational 8X60 machining	2
39	CN4000143	(00001-)	M6 * 20 Allen	2
40	CN4000370	(00001-)	M6 flat pad, ¢6.4*¢12*0.8mm	12
41		(00001-)	accelerator pedal assembly	1
42	CN4000087	(00001-)	M8 * 25 hex	2
43	CN5000203	(00001-)	Mini foot pedal bracket, GMmini	1
44	CN4000064	(00001-)	M6 * 20 hex	2
45	CN4000862	(00001-)	Pin ¢8X70	1
46	CN5000963	(00001-)	Mini brush head push rod copper bushing	1
47	CN4000875	(00001-)	¢6X60 for the pin. ¢6X60	2
48	CN5000923	(00001-)	Putter head, GM110	2
49	CN5000235	(00001-)	Mini brush head switch base, GMmini	1
50	CN4000328	(00001-)	M6 self-locking nut	2

▽ CONJUNTO
▲ INCLUÍDAS EM UM CONJUNTO

CHASSI 2 DE 2

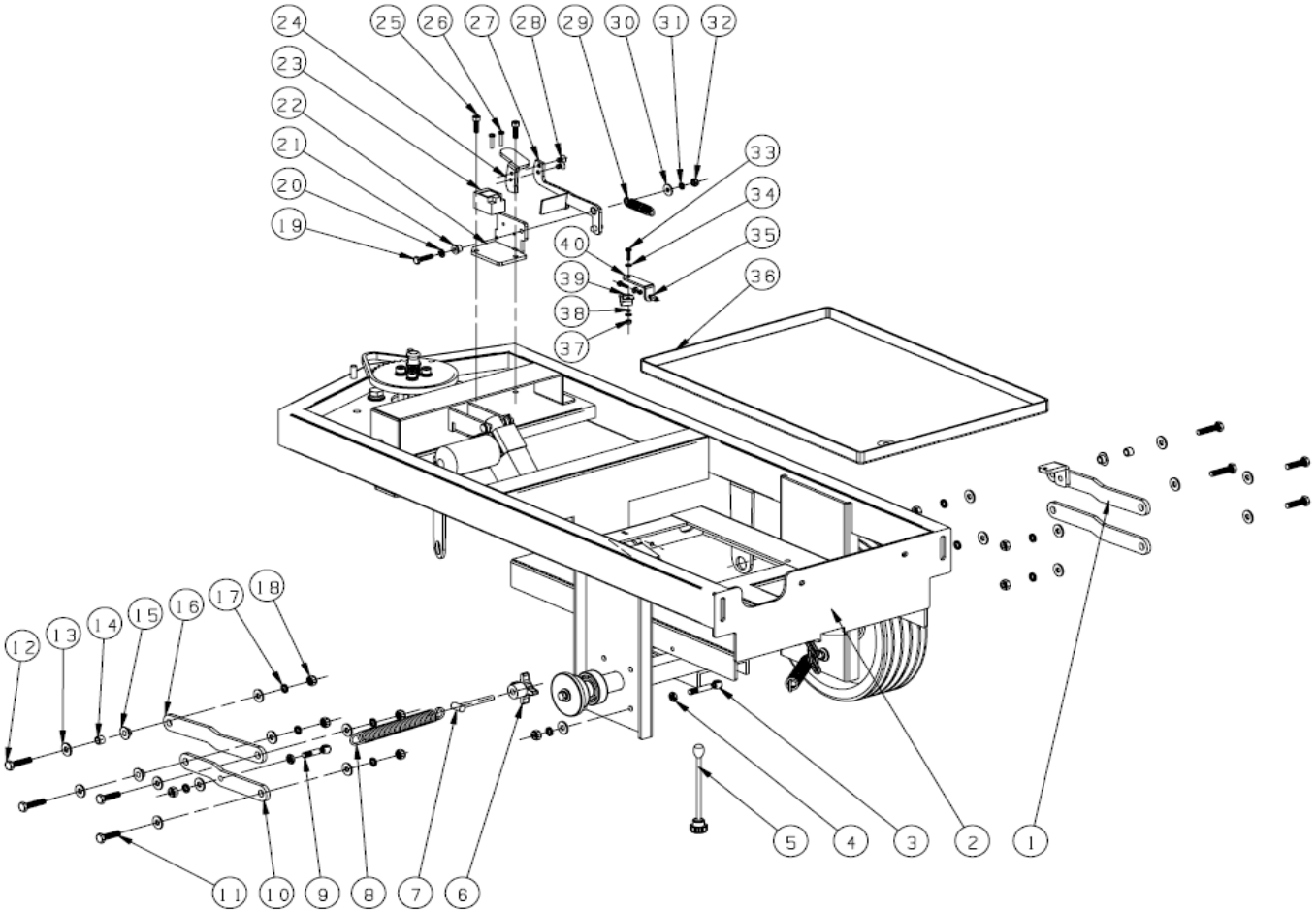
24
25
26
27
28
29
30
31
32
23
22
21
20
19
33
34
35
36
40
39
38
37
12
13
14
15
16
17
18
11
10
9
8
7
6
5
4
3
2
1

CHASSI 2 DE 2

Ref	Código	Número de Série	Descrição	Qtd
1	CN5000253	(00001-)	Mini motor connecting rod (welding)	1
2	CN5000223	(00001-)	Mini main frame, GMmini	1
3	CN4000176	(00001-)	M8*50 live screw	2
4	CN4000329	(00001-)	M8 nut	3
5	CN5002292	(00001-)	Brush head balancing sleeve	1
	CN4000461	(00001-)	GM50B forearm adjusting screw M6×125mm	1
	CN4000784	(00001-)	GM50B M6×25 inner wire star nut	1
6	CN4000788	(00001-)	M6 square nut	1
7	CN4000461	(00001-)	GM50B forearm adjusting screw M6×125mm	1
	CN5000797	(00001-)	GM50B forearm adjusting spring pin	1
8	CN5001207	(00001-)	GM50B adjustment spring	1
9	CN4000175	(00001-)	M8*40 live screw	2
10	CN5000188	(00001-)	Mini motor connecting rod (short)	1
11	CN4000091	(00001-)	M8 * 35 hex	4
12	CN4000090	(00001-)	M8 * 30 hex	4
13	CN4000373	(00001-)	M8 gasket, ¢8.4*¢16*1mm	19
14	CN5000805	(00001-)	GM70BT brush plate motor mounting plate	2
15	CN5000796	(00001-)	GM50B motor connection copper bushing	4
16	CN5000186	(00001-)	Mini motor connecting rod (long), GMmini	2
17	CN4000406	(00001-)	M8 play mat	11
18	CN4000330	(00001-)	M8 self-locking nut	11
19	CN4000072	(00001-)	M6 * 25 hex	1
20	CN4000370	(00001-)	M6 flat pad, ¢6.4*¢12*0.8mm	1
21	CN5000927	(00001-)	Drive pedal copper bushing	1
22	CN5000351	(00001-)	Mini drives pedal base	1
23	CN5003081	(00001-)	Access switch wiring harness assembly	1
24	CN5000234	(00001-)	Mini drive pedal upper arm, GMmini	1
25	CN4000143	(00001-)	M6 * 20 Allen	1
26	CN4000112	(00001-)	M4*25 large pan head cross	1
27	CN5000233	(00001-)	Mini drive foot lower arm, GMmini	1
28	CN4000123	(00001-)	M6*10 countersunk hexagon socket head	2
29	CN5001211	(00001-)	GM50B suction spring	1
30	CN4000371	(00001-)	M6 increase the gasket	1
31	CN4000405	(00001-)	M6 play mat	1
32	CN4000328	(00001-)	M6 self-locking nut	1
33	CN4000037	(00001-)	M4*16 small disc head cross	2
34	CN4000366	(00001-)	M4 flat pad, ¢4.3*¢9*0.8mm	3
35	CN4000445	(00001-)	M4 rivet nut 4X13	1
36	CN5002034	(00001-)	GMmini battery base	1
37	CN4000323	(00001-)	M4 self-locking nut	1
38	CN4000403	(00001-)	The M4 play mat	2
39	CN5001238	(00001-)	Ganizational 20 tube stuck shrapnel	1
40	CN5000191	(00001-)	Mini water pipe bracket	1

▽ CONJUNTO
▲ INCLUÍDAS EM UM CONJUNTO

PAINEL ELÉTRICO

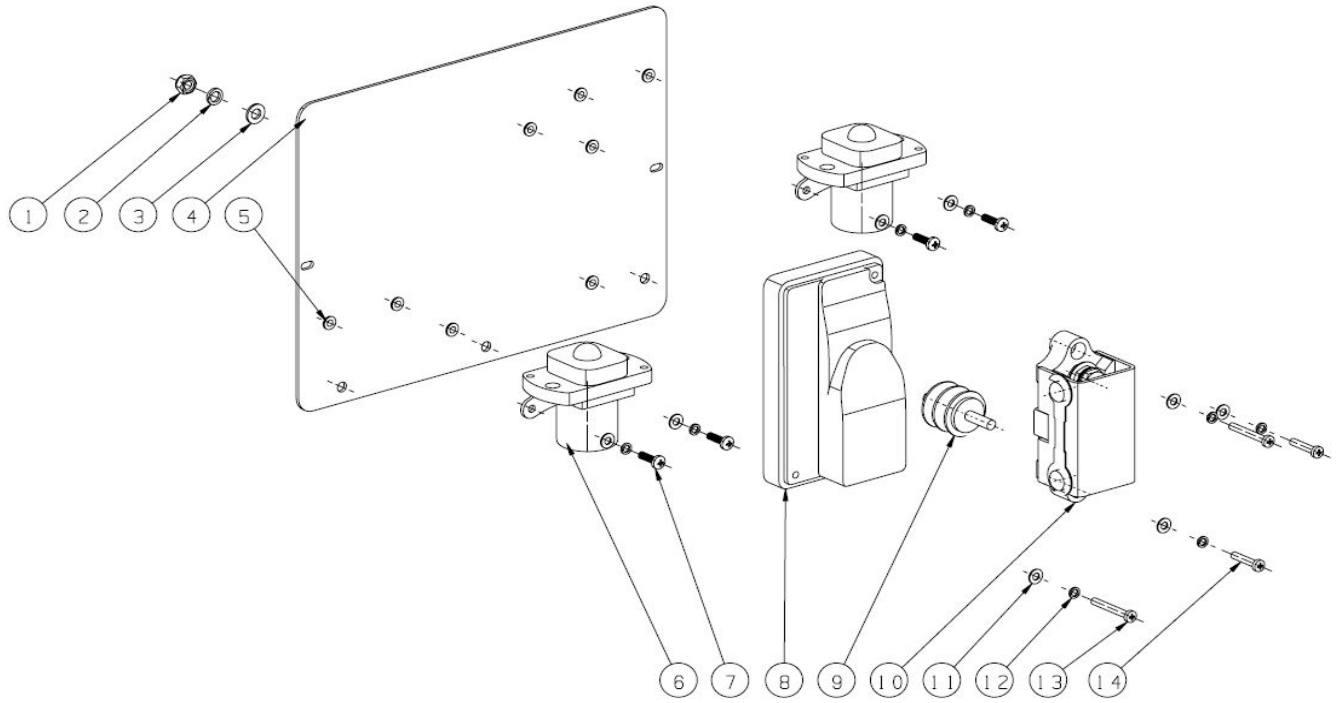

PAINEL ELÉTRICO

Ref	Código	Número de Série	Descrição	Qtd
1	CN4000328	(00001-)	M6 self-locking nut	1
2	CN4000405	(00001-)	M6 play mat	1
3	CN4000370	(00001-)	M6 flat pad, ¢ 6.4* ¢ 12*0.8mm	1
4	CN5000228	(00001-)	Mini electric mounting plate	1
5	CN4000440	(00001-)	M4 rivet nut 4X11	8
6	CN5001703	(00001-)	New dc contactor sw60-40p	2
7	CN4000194	(00001-)	M4*14 large pan head cross	4
8	CN5001588	(00001-)	Cortez drive circuit board	1
9	CN5001698	(00001-)	Insulated pile head GM110	1
10	CN5001636	(00001-)	100A box. 100A	1
11	CN4000366	(00001-)	M4 flat pad, ¢ 4.3* ¢ 9*0.8mm	8
12	CN4000403	(00001-)	The M4 play mat	8
13	CN4000163	(00001-)	M4*30 large pan head cross	2
14	CN4000044	(00001-)	M4*20 large pan head cross	2

PAINEL 1 DE 3

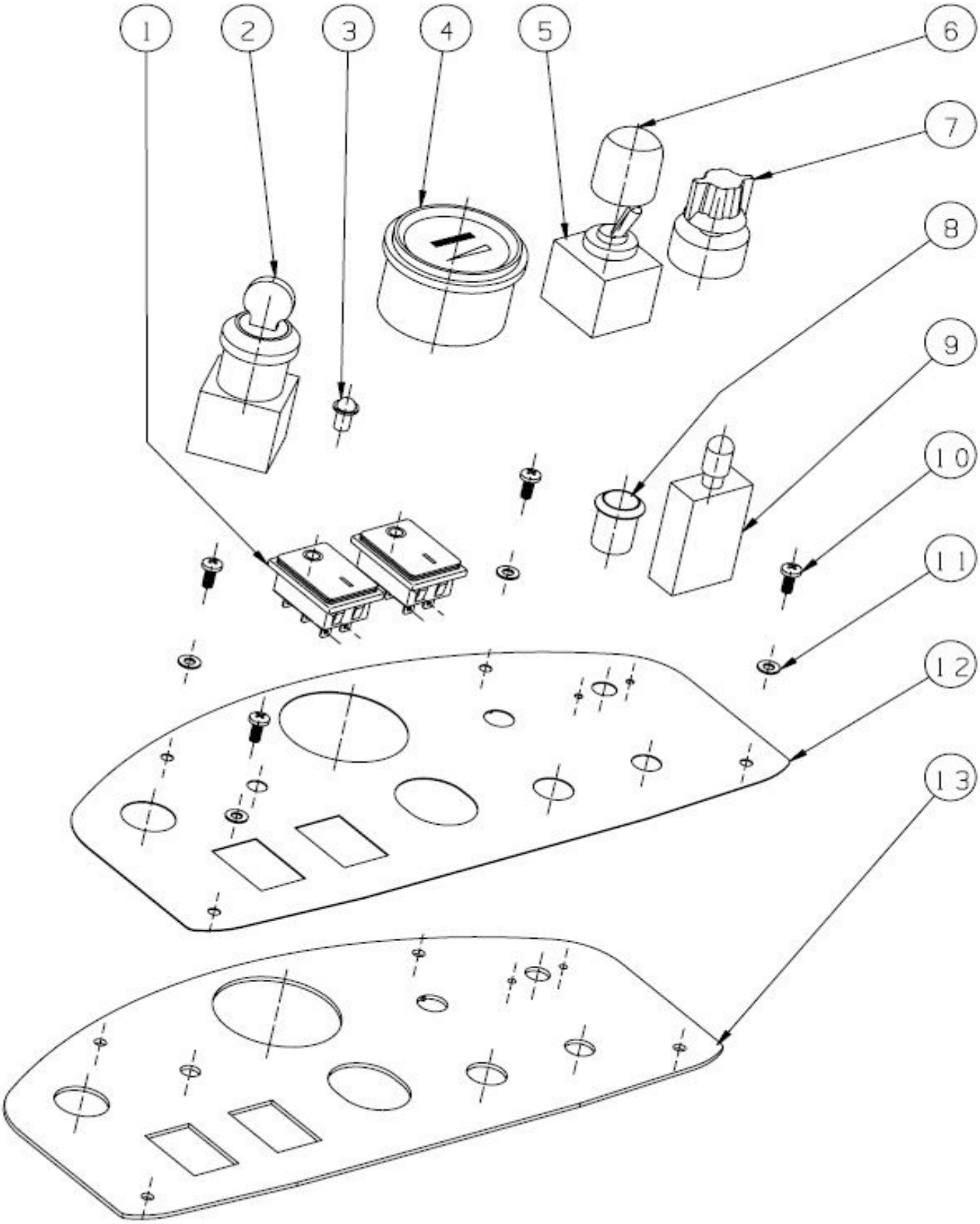

PAINEL 1 DE 3

Ref	Código	Número de Série	Descrição	Qtd
1	CN5001535	(00001-)	GM110 brush and suction power switch	2
2	CN5001546	(00001-)	GM50B with emergency stop key switch	1
3	CN5001841	(00001-)	Fault indicator light 24V, 24V	1
4	CN5001671	(00001-)	GM50B battery gauge 24V	1
5	CN5001536	(00001-)	GM110 direction switch kng3-302	1
6	CN5001545	(00001-)	GM110 directional switch waterproof cap	1
7	CN4000638	(00001-)	GM70BT speed control switch knob, ¢25	1
8	CN5001538	(00001-)	Horn switch, GM110	1
9	CN5001643	(00001-)	5A protector (with waterproof cap), 5A	1
10	CN4000038	(00001-)	M4*12 large pan head cross	4
11	CN4000366	(00001-)	M4 flat pad, ¢4.3*¢9*0.8mm	4
12	CN5003808	(00001-)	GMmini panel sticker	1
13	CN5000247	(00001-)	Mini control panel, GMmini	1

TRAÇÃO

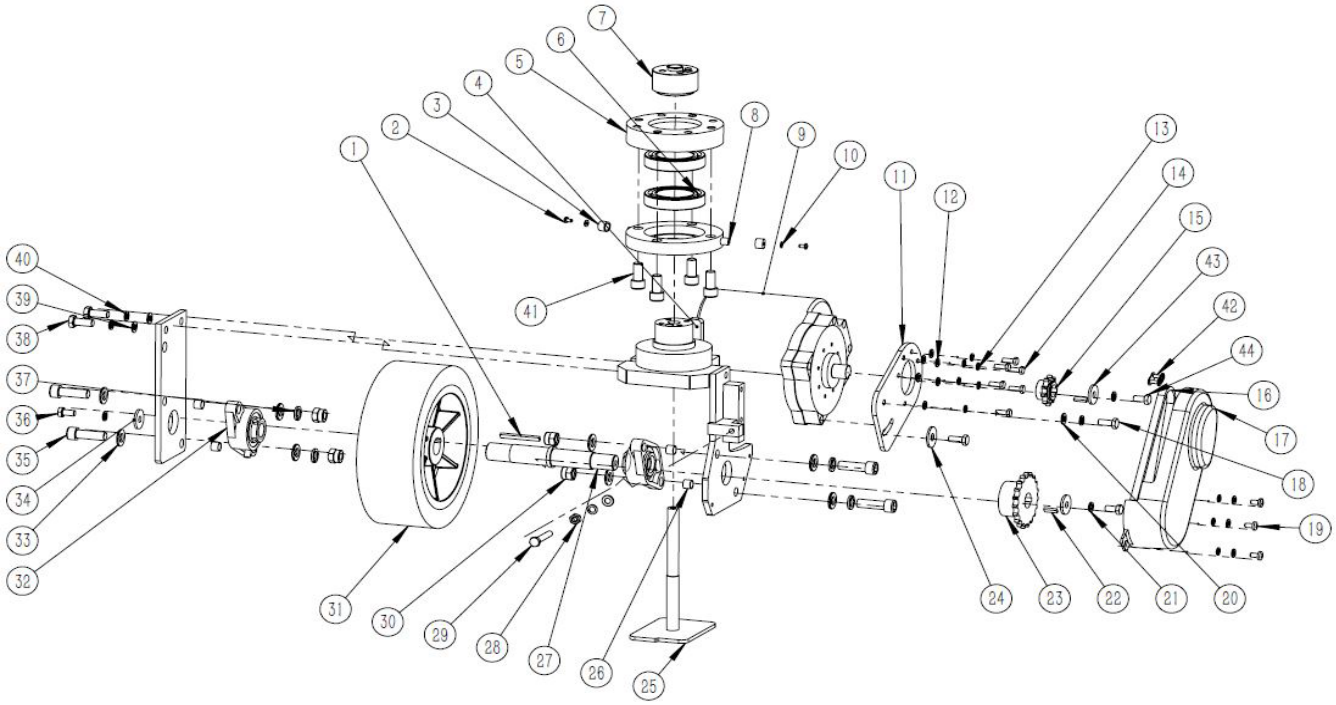
1
2
3
4
5
6
7
8
9
10
11
12
13
14
15
16
17
18
19
20
21
22
23
24
25
26
27
28
29
30
31
32
33
34
35
36
37
38
39
40
41
42
43
44

TRAÇÃO

Ref	Código	Número de Série	Descrição	Qtd
1	CN4000792	(00001-)	6 x6x50mm key	1
2	CN4000040	(00001-)	M4*10 large pan head cross	2
3	CN5000934	(00001-)	Steering cushion, GM110	2
4	CN5000236	(00001-)	mini front wheel main frame	1
5	CN5000916	(00001-)	Steering bearing cover, GM110	1
6	CN4000519	(00001-)	6010 bearing	2
7	CN5000917	(00001-)	Steering coupling shaft (stop	1
8	CN5000915	(00001-)	Steering bearing lower cover, GM110	1
9	CN5002407	(00001-)	GM110 front drive motor	1
10	CN4000367	(00001-)	M4 increase the gasket	2
11	CN5000194	(00001-)	Drive motor mounting plate, GM110	1
12	CN4000370	(00001-)	M6 flat pad, ¢6.4*¢12*0.8mm	9
13	CN4000405	(00001-)	M6 play mat	9
14	CN4000065	(00001-)	M6 * 16 hex	6
15	CN5000918	(00001-)	Drive sprocket, GM110 C4 10	1
16	CN4001059	(00001-)	GM110 drive chain before assembly	1
17	CN5002391	(00001-)	Mini front drive shield, GMmini	1
18	CN4000087	(00001-)	M8 * 25 hex	2
19	CN4000080	(00001-)	M6*12 large pan head cross	3
20	CN4000373	(00001-)	M8 gasket, ¢8.4*¢16*1mm	1
21	CN4000406	(00001-)	M8 play mat	5
22	CN4000794	(00001-)	6 x6x30mm key	1
23	CN5000937	(00001-)	Drive big sprocket, GM110 B4 19	1
24	CN4000374	(00001-)	M8 increase the gasket	1
25	CN5000200	(00001-)	Mini brake pad, GMmini	1
26	CN5000961	(00001-)	Drive bearing bushing	4
27	CN5000919	(00001-)	Drive axle, GM110	1
28	CN4000329	(00001-)	M8 nut	1
29	CN4000094	(00001-)	M8 * 40 hex	1
30	CN4000335	(00001-)	M12 self-locking nut	4
31	CN5002260	(00001-)	GM110 front wheel (red)	1
32	CN4000542	(00001-)	Mount bearing UCFL205, UCFL205	2
33	CN4000377	(00001-)	M12 stainless steel gasket	8
34	CN5000192	(00001-)	Front axle cover, GM110	2
35	CN4000115	(00001-)	M12 * 40 Allen	4
36	CN4000107	(00001-)	M8 * 16 hex	1
37	CN4000408	(00001-)	M12 pad, stainless steel	4
38	CN4000171	(00001-)	M10 * 25 hex	2
39	CN4000376	(00001-)	M10 gasket	4
40	CN4000407	(00001-)	M10 play mat	2
41	CN4000113	(00001-)	M12 x 25 Allen	4
42	CN4000770	(00001-)	4-point chain joint GM110	1
43	CN4000375	(00001-)	M8 extra-large gasket, ¢8.4*¢24*2mm	1
44	CN4000281	(00001-)	M8*16 outer hexagonal thin head	1

▽ CONJUNTO
▲ INCLUÍDAS EM UM CONJUNTO

PAINEL 2 DE 3

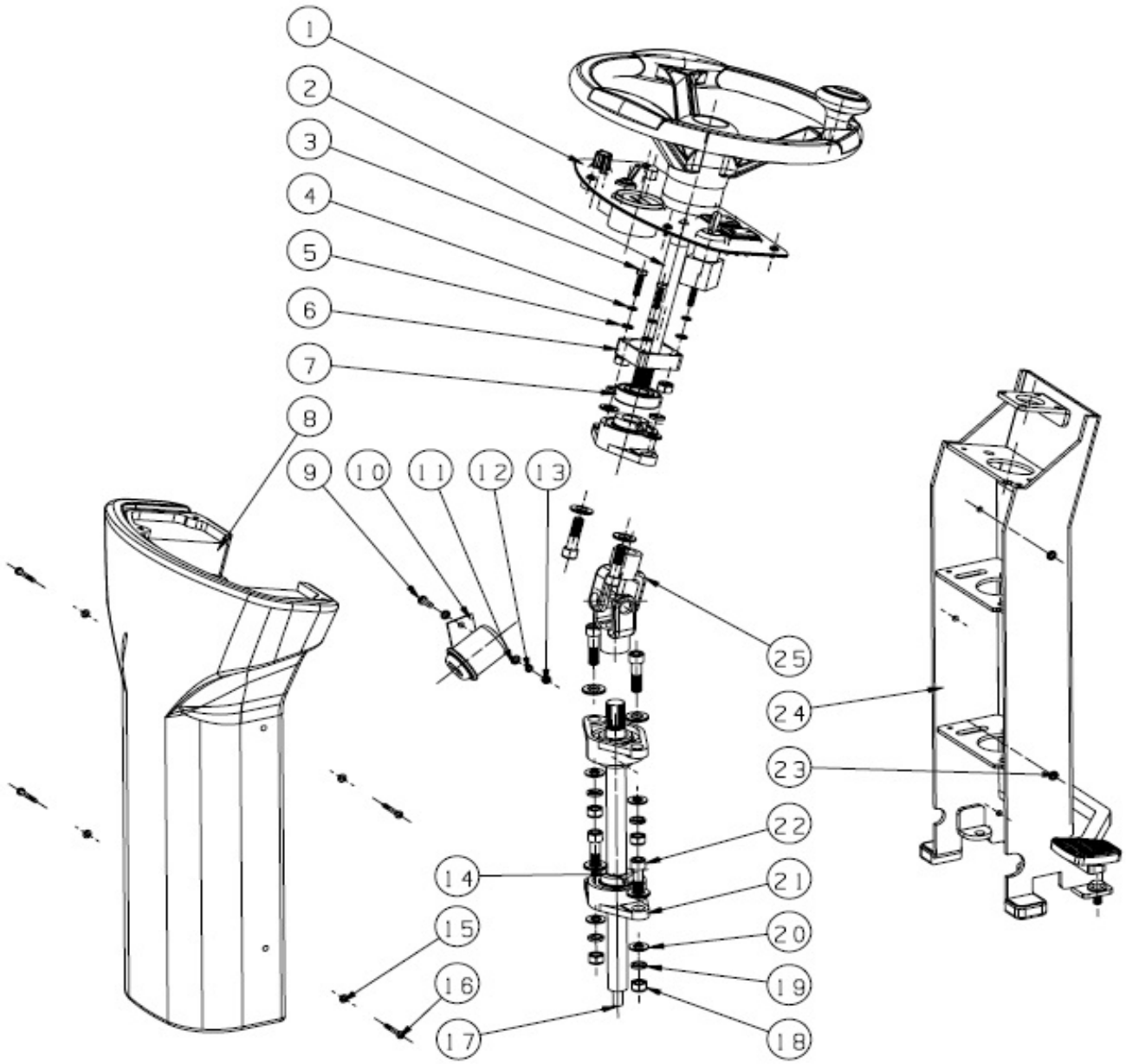

PAINEL 2 DE 3

Ref	Código	Número de Série	Descrição	Qtd
1	--	(00001-)	panel assembly	1
2	CN5000933	(00001-)	Mini steering wheel axle, GMmini	1
3	CN4000067	(00001-)	M6 * 35 hex	4
4	CN4000405	(00001-)	M6 play mat	4
5	CN4000370	(00001-)	M6 flat pad, ¢6.4*¢12*0.8mm	4
6	CN5000946	(00001-)	Mini steering wheel housing, GMmini	2
7	CN4000520	(00001-)	6204 bearings, 6204	1
8	CN5002753	(00001-)	Mini steering wheel plastic cover 2kg	1
9	CN4000053	(00001-)	M5*16 large pan head cross	1
10	CN5003222	(00001-)	Continuous buzzer wire harness	1
11	CN4000368	(00001-)	M5 flat pad, ¢5.3*¢10*0.8mm	2
12	CN4000404	(00001-)	The M5 play mat	1
13	CN4000326	(00001-)	M5 self-locking nut	1
14	CN4000485	(00001-)	25 ¢shaft card	1
15	CN4000366	(00001-)	M4 flat pad, ¢4.3*¢9*0.8mm	4
16	CN4000163	(00001-)	M4*30 large pan head cross	4
17	CN5000936	(00001-)	Mini steering shaft, GMmini	1
18	CN4000333	(00001-)	M10 self-locking nut	6
19	CN4000407	(00001-)	M10 play mat	6
20	CN4000376	(00001-)	M10 gasket	12
21	CN4000543	(00001-)	Mount bearing UCFL204, UCFL204	3
22	CN4000147	(00001-)	M10 * 35 Allen	6
23	CN4000445	(00001-)	M4 rivet nut 4X13	5
24	CN5000224	(00001-)	Mini steering wheel master bracket	1
25	CN4000818	(00001-)	GMmini universal joint	1

PAINEL 3 DE 3

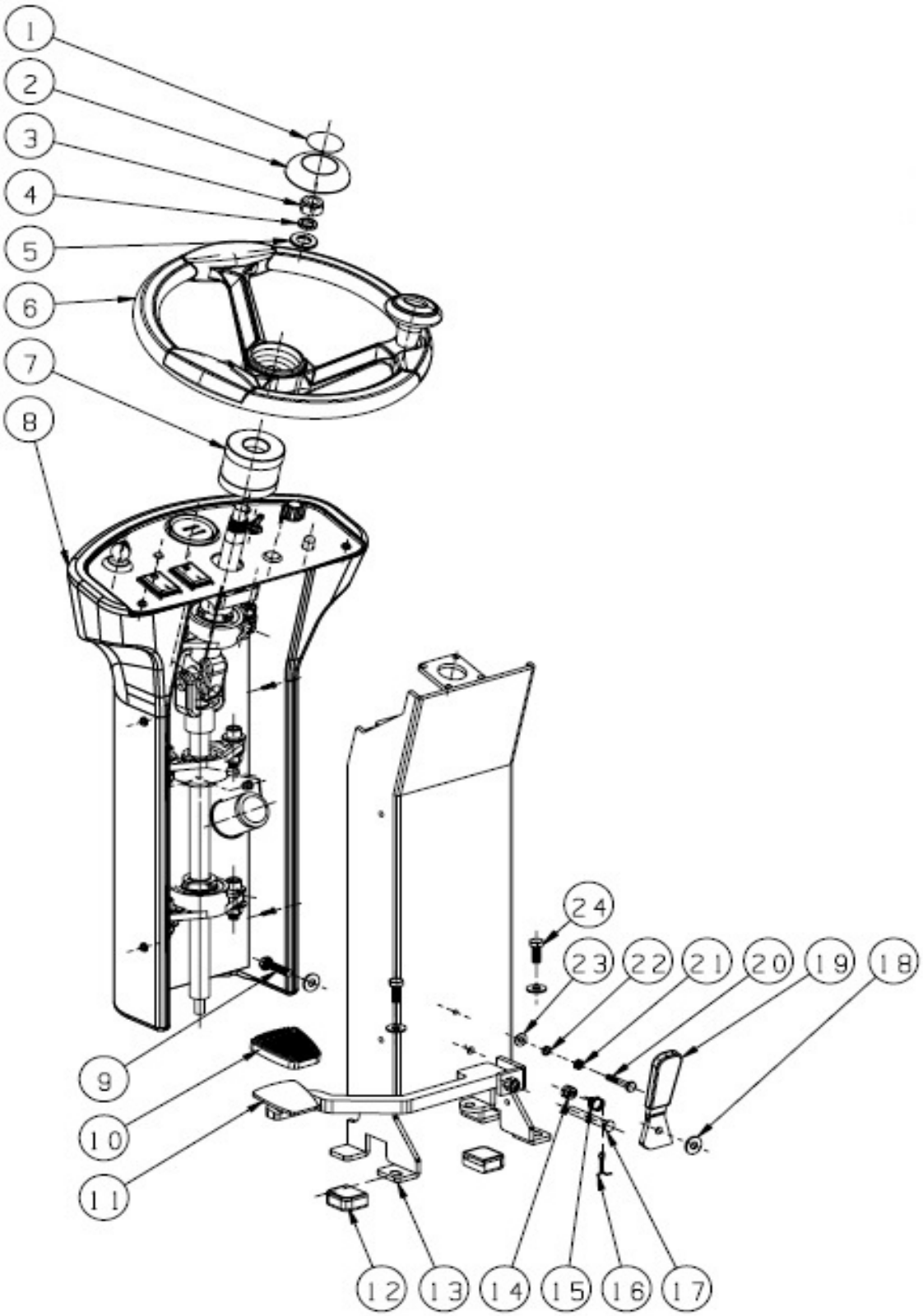

PAINEL 3 DE 3

Ref	Código	Número de Série	Descrição	Qtd
1	CN5003749	(00001-)	Gaomei steering wheel sticker	1
2	CN5002015	(00001-)	Direction bar cover	1
3	CN4000345	(00001-)	M14 self-locking nut	1
4	CN4000411	(00001-)	M14 play mat	1
5	CN4000385	(00001-)	M14 gasket, ¢14.5*¢28*1.5mm	1
6	CN5002019	(00001-)	Steering wheel, GM110	1
7	CN5002829	(00001-)	Direction bar sheath, GM110	1
8	--	(00001-)	steering and console group1	1
9	CN4000091	(00001-)	M8 * 35 hex	1
10	CN4000765	(00001-)	GM50B foot leather case	1
11	CN5000226	(00001-)	Mini brake arm, GMmini	1
12	CN5002289	(00001-)	Rubber sleeve for main frame of mini	2
13	CN5000224	(00001-)	Mini steering wheel master bracket	1
14	CN4000330	(00001-)	M8 self-locking nut	1
15	CN5001232	(00001-)	Brake handle spring	1
16	CN4000869	(00001-)	¢3X15, ¢3	1
17	CN4000860	(00001-)	¢8X60 for the pin. ¢8X60	1
18	CN4000373	(00001-)	M8 gasket, ¢8.4*¢16*1mm	4
19	CN5000170	(00001-)	Brake handle, GM110	1
20	CN4000067	(00001-)	M6 * 35 hex	1
21	CN4000327	(00001-)	M6 nut	1
22	CN4000405	(00001-)	M6 play mat	1
23	CN4000370	(00001-)	M6 flat pad, ¢6.4*¢12*0.8mm	1
24	CN4000093	(00001-)	M8 * 20 hex	2

TANQUE SOLUÇÃO

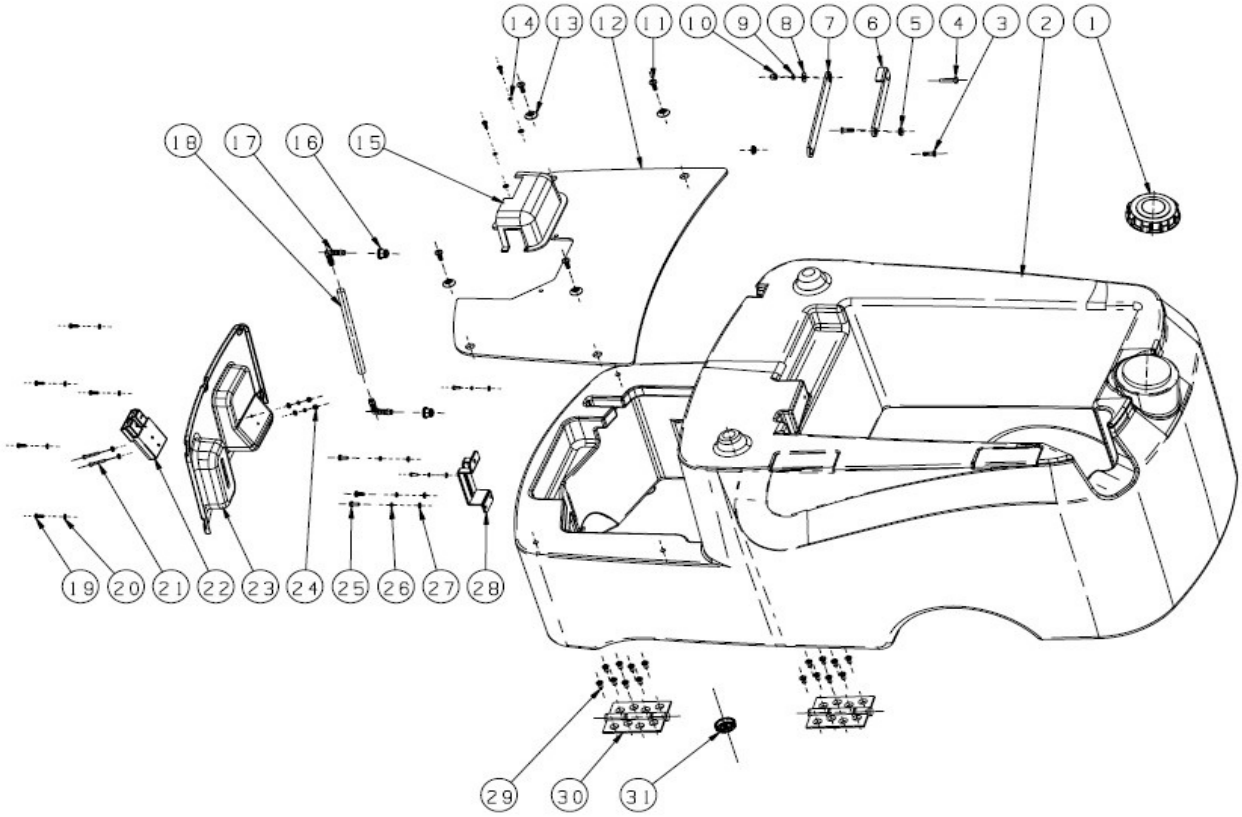

TANQUE SOLUÇÃO

Ref	Código	Número de Série	Descrição	Qtd
1	CN5002064	(00001-)	Outer silk clear water tank cover	1
1	CN5002065	(00001-)	Outer silk clear water tank cover block	1
2	CN5002672	(00001-)	17kg mini water tank	1
3	CN4000139	(00001-)	M6*16 flat cross	2
4	CN4000072	(00001-)	M6 * 25 hex	1
5	CN5000959	(00001-)	Mini sewage tank pole copper bushing	2
6	CN5000239	(00001-)	Mini sewage tank bottom support rod	1
7	CN5000240	(00001-)	Mini sewage tank support pole, GMmini	1
7	CN5000960	(00001-)	Sewage tank support rod assembly copperb	1
8	CN4000371	(00001-)	M6 increase the gasket	1
9	CN4000405	(00001-)	M6 play mat	1
10	CN4000328	(00001-)	M6 self-locking nut	1
11	CN4000214	(00001-)	M6*16 small disc head cross	4
12	CN5000242	(00001-)	mini pedal (patterned aluminum plate)	1
13	CN5002016	(00001-)	Pedal plastic pad	4
14	CN4000403	(00001-)	The M4 play mat	6
15	CN5002385	(00001-)	Handbrake shield, GM110	1
16	CN5002261	(00001-)	Clear pipe elbow sheath, GM110	2
17	CN5002131	(00001-)	Transparent pipe elbow (new style)	2
18	CN5002860	(00001-)	PVC transparent hose, ¢8×¢12	1
19	CN4000038	(00001-)	M4*12 large pan head cross	4
20	CN4000366	(00001-)	M4 flat pad, ¢4.3*¢9*0.8mm	13
21	CN4000163	(00001-)	M4*30 large pan head cross	2
22	CN5001740	(00001-)	GM110 charger quick connect (dial)	2
23	CN5002390	(00001-)	GMmini clean water tank front cover	1
24	CN4000324	(00001-)	M4 half round nut	2
25	CN4000135	(00001-)	M5*12 pan head cross	3
26	CN4000404	(00001-)	The M5 play mat	3
27	CN4000368	(00001-)	M5 flat pad, ¢5.3*¢10*0.8mm	3
28	CN5000238	(00001-)	Mini water valve handle holder, GMmini	1
29	CN4000193	(00001-)	M5*10 flat cross	16
30	CN4000812	(00001-)	GM110 clean tank hinge	2
31	CN5001935	(00001-)	GM50B clear water tank plug	1
31	CN5002217	(00001-)	GM50B clean water tank plug gasket	1

▽ CONJUNTO
▲ INCLUÍDAS EM UM CONJUNTO

BASE, COBERTURA, ESCOVA

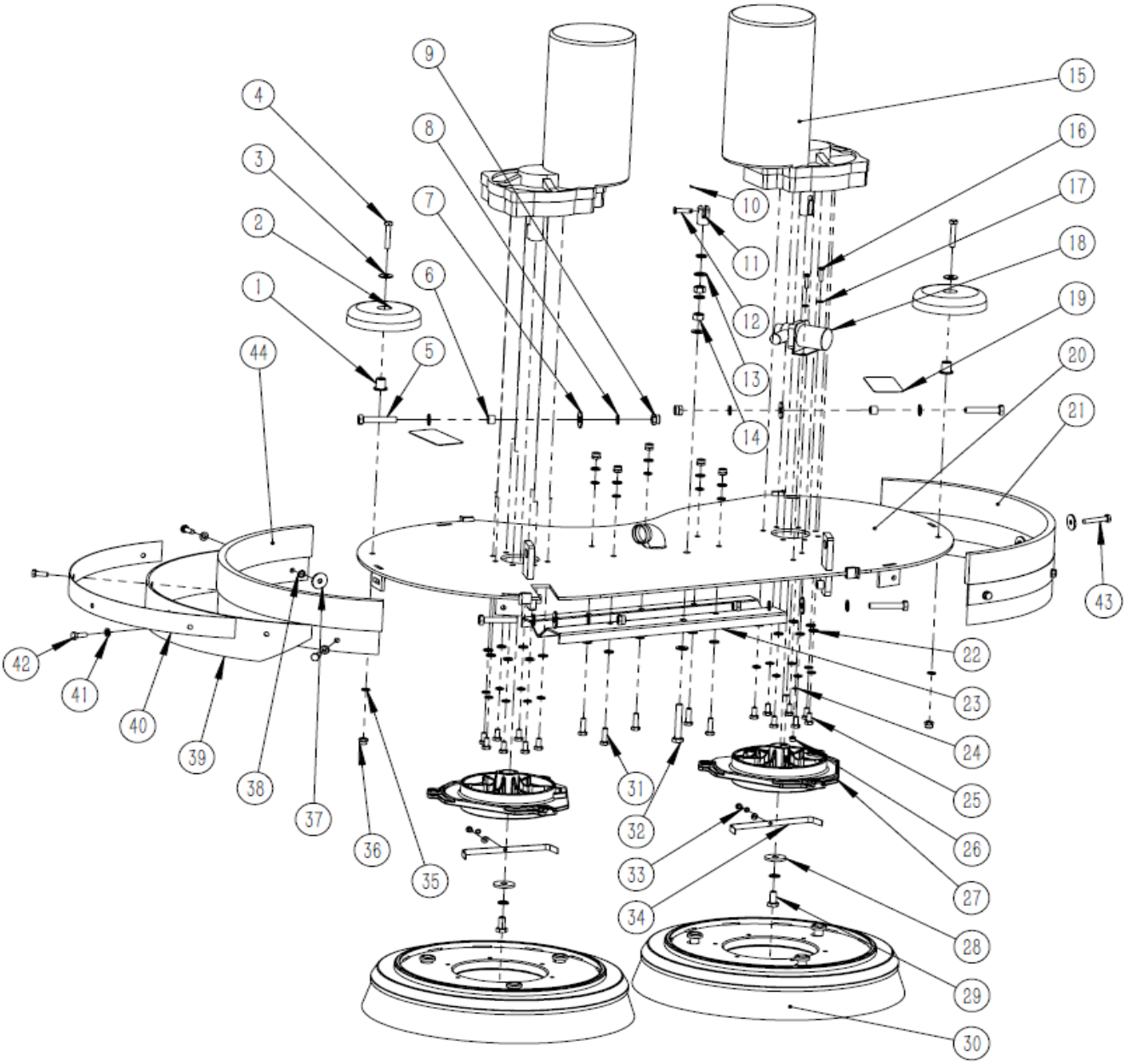

BASE, COBERTURA, ESCOVA

Ref	Código	Número de Série	Descrição	Qtd
1	CN5001936	(00001-)	GM50B guide wheel pad outer	2
2	CN5001941	(00001-)	GM50B guide wheel, material: PA66 black	2
3	CN4000371	(00001-)	M6 increase the gasket	2
4	CN4000067	(00001-)	M6 * 35 hex	2
5	CN4000091	(00001-)	M8 * 35 hex	4
6	CN5000805	(00001-)	GM70BT brush plate motor mounting plate	2
7	CN4000374	(00001-)	M8 increase the gasket, ¢8.4*¢20*1.5mm	4
8	CN4000406	(00001-)	M8 play mat	8
9	CN4000330	(00001-)	M8 self-locking nut	4
10	CN4000868	(00001-)	¢2X20, ¢2	1
11	CN5000962	(00001-)	Brush head chain joint, GM110	1
12	CN4000874	(00001-)	¢6X20 for the pin. ¢6X20	1
13	CN4000373	(00001-)	M8 gasket, ¢8.4*¢16*1mm	7
14	CN4000329	(00001-)	M8 nut	2
15	CN5002406	(00001-)	GM70BT brush motor	2
16	CN4000044	(00001-)	M4*20 large pan head cross	2
17	CN4000366	(00001-)	M4 flat pad, ¢4.3*¢9*0.8mm	6
18	CN5003086	(00001-)	GMmini solenoid valve harness	1
19	CN5003753	(00001-)	Brush plate collision warning label	2
20	CN5000225	(00001-)	Mini motor mounting plate, GMmini	1
21	CN5003688-650	(00001-)	GM70BT motor mounting strip	1
22	CN4000370	(00001-)	M6 flat pad, ¢6.4*¢12*0.8mm	24
23	CN5000478	(00001-)	GMmini outlet cover, GM110	1
24	CN4000403	(00001-)	The M4 play mat	4
25	CN4000065	(00001-)	M6 * 16 hex	14
26	CN4000405	(00001-)	M6 play mat	2
27	CN5000067	(00001-)	GM70BT automatic brush buckle, GM70BT	2
28	CN4000375	(00001-)	M8 extra-large gasket, ¢8.4*¢24*2mm	2
29	CN4000107	(00001-)	M8 * 16 hex	2
30	CN5002539	(00001-)	Washing machine ground brush	2
31	CN4000065	(00001-)	M6 * 16 hex	5
32	CN4000094	(00001-)	M8 * 40 hex	1
33	CN4000037	(00001-)	M4*16 small disc head cross	2
34	CN5001213	(00001-)	GM70BT brush buckle shrapnel galvanized	2
35	CN4000405	(00001-)	M6 play mat	21
36	CN4000328	(00001-)	M6 self-locking nut	7
37	CN5002208	(00001-)	GM70BT strap silicone pad	8
38	CN4000337	(00001-)	GM70BT M6 strap nut	8
39	CN5002256	(00001-)	GM85BT little pimp	2
40	CN5000246	(00001-)	Mini stainless steel layering	2
41	CN4000371	(00001-)	M6 increase the gasket	10
42	CN4000065	(00001-)	M6 * 16 hex	8
43	CN4000067	(00001-)	M6 * 35 hex	6
44	CN5003688-650	(00001-)	GM70BT motor mounting strip	1

▽ CONJUNTO
▲ INCLUÍDAS EM UM CONJUNTO

FILTRO

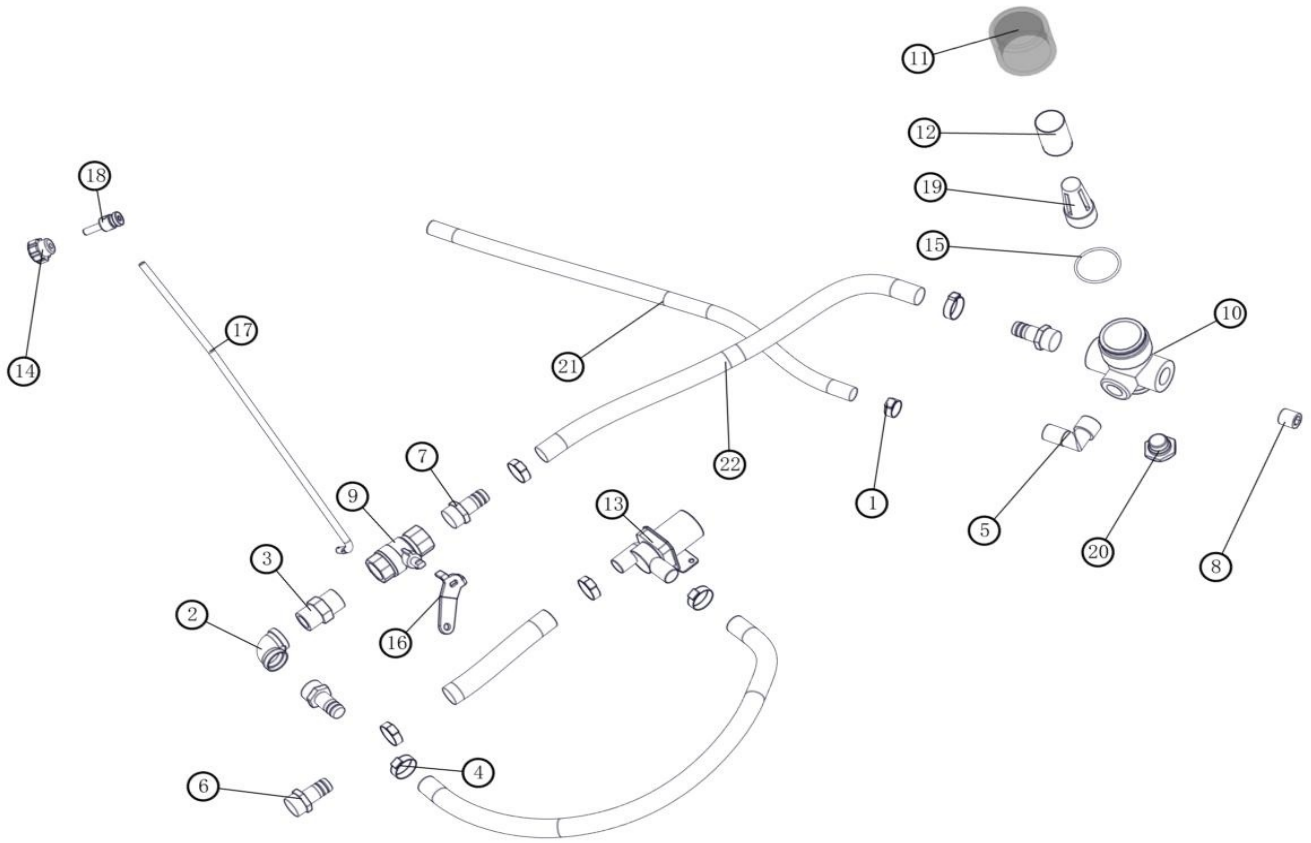

FILTRO

Ref	Código	Número de Série	Descrição	Qtd
1	CN4000016	(00001-)	16.6 clamp	1
2	CN5001390	(00001-)	G1/2 inner bend, brass	1
3	CN5001385	(00001-)	G1/2 outer wire docking	1
4	CN4000026	(00001-)	¢25 stainless steel wire clamp	6
5	CN5001397	(00001-)	G3/8 outer wire × ganizational 12 elbow	1
6	CN5001388	(00001-)	G3/8 outer silk × ϕ 14 direct	1
7	CN5001393	(00001-)	G1/2 wire × ganizational 16 direct	3
8	CN5001402	(00001-)	G1/2 outer wire plug	1
9	CN5003603	(00001-)	GM110 water valve body	1
10	CN5002123	(00001-)	Roll brush 110 strainer body	1
11	CN5002163	(00001-)	GM230 clean water filter cover	1
12	CN5002164	(00001-)	GM230 clean water filter	1
13	CN5003086	(00001-)	GMmini solenoid valve harness assembly	1
14	CN4000784	(00001-)	GM50B M6×25 inner wire star nut	1
15	CN4000659	(00001-)	¢33x2.4 inside diameter of the o-ring	1
16	CN5000241	(00001-)	Mini water switch handle, GMmini	1
17	CN5000891	(00001-)	Mini water switch drawing, GMmini	1
18	CN5000238	(00001-)	Mini water valve handle holder, GMmini	1
19	CN5002180	(00001-)	Strainer guide bracket, GM110	1
20	CN5001101	(00001-)	Mini strainer plug	1
21	CN5002864	(00001-)	¢12× ¢16 transparent silicone tube	1
22	CN5002890	(00001-)	Ganizational 16 wire hose	3

ASPIRAÇÃO

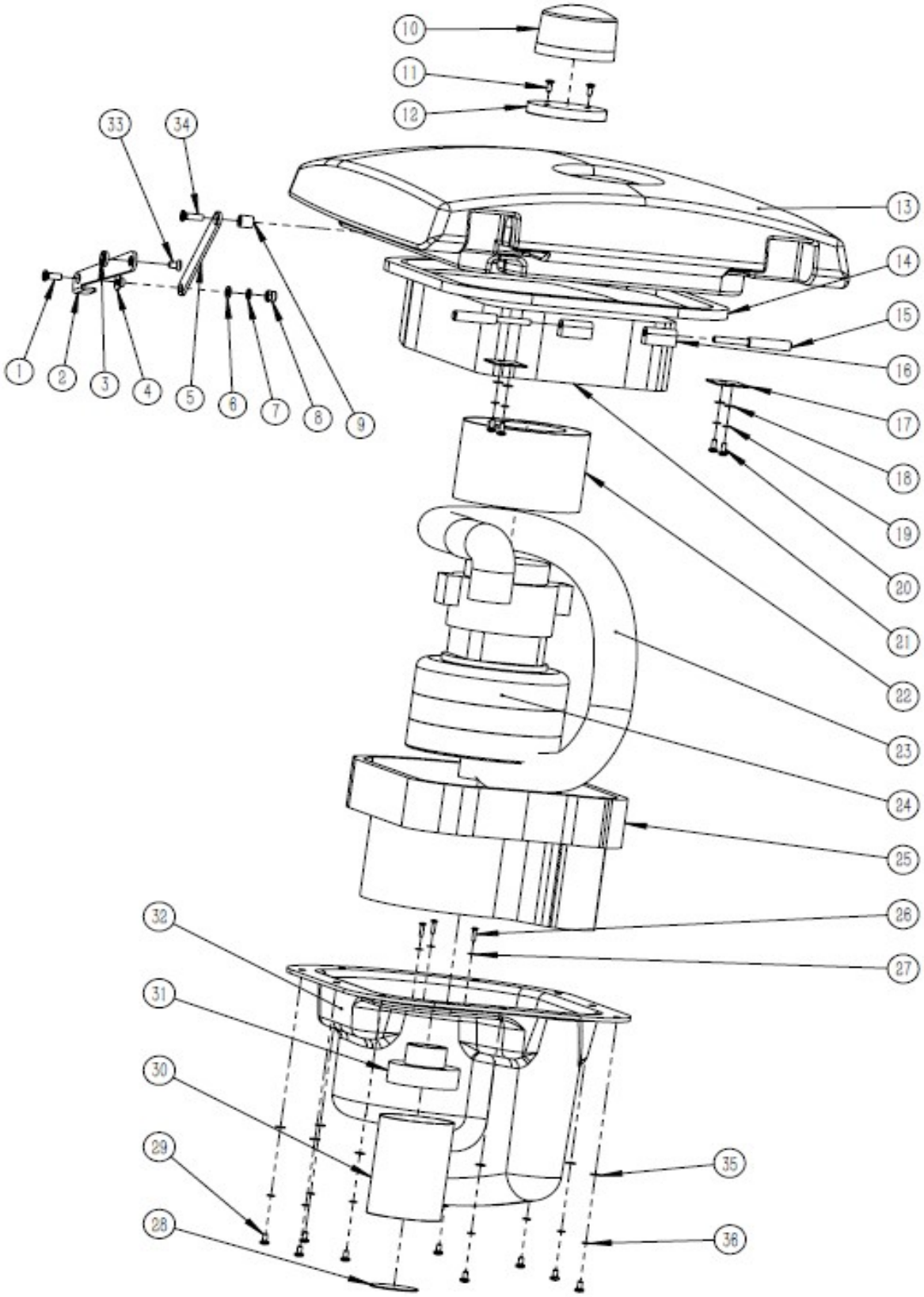
10
11
12
33
34
13
14
15
16
1
2
3
4
5
6
7
8
9
17
18
19
20
21
22
23
24
25
26
27
32
31
30
29
28
35
36

ASPIRAÇÃO

Ref	Código	Número de Série	Descrição	Qtd
1	CN4000139	(00001-)	M6*16 flat cross	1
2	CN5000231	(00001-)	Mini rear cover lower support rod	1
3	CN5000957	(00001-)	Copper bushing under the mini back cover	1
4	CN5000794	(00001-)	GM50B Sink tank main handle copper	1
5	CN5000230	(00001-)	Mini back cover with support rod, GMmini	1
6	CN4000373	(00001-)	M8 gasket, ¢8.4*¢16*1mm	1
7	CN4000371	(00001-)	M6 increase the gasket	1
8	CN4000328	(00001-)	M6 self-locking nut	1
9	CN5000958	(00001-)	Copper bushing on the back of the mini	1
10	CN5003082	(00001-)	Reverse light harness assembly	1
11	CN5001842	(00001-)	Reverse warning light	2
12	CN5003082	(00001-)	Reverse light harness assembly	1
13	CN5002751	(00001-)	Mini rear cover (grey)2kg	1
14	CN5003684	(00001-)	Motor hood heterosexual seal, black	1
15	CN5000945	(00001-)	Mini sewage tank hinge shaft, GMmini	2
16	CN5002047	(00001-)	Sink tank hinge shaft positioning block	2
17	CN5000227	(00001-)	Mini hinge shaft press, GMmini	2
18	CN4000366	(00001-)	M4 flat pad, ¢4.3*¢9*0.8mm	4
19	CN4000403	(00001-)	The M4 play mat	0
20	CN4000040	(00001-)	M4*10 large pan head cross	4
21	CN5003646	(00001-)	Cover GMmini with shell sponge 1	1
	CN5003648	(00001-)	Cover GMmini with shell sponge 2	1
	CN5003649	(00001-)	Cover GMmini with shell sponge 3	1
	CN5003650	(00001-)	Cover GMmini with shell sponge 4	1
22	CN5002262	(00001-)	GM110 motor sheath, GM110	1
23	CN5002837	(00001-)	Motor suction expansion tube,	1
24	CN5002467	(00001-)	GM110B three-layer vacuum motor	1
25	CN5003647	(00001-)	GMmini rear cover lower shell sponge 1	1
	CN5003651	(00001-)	GMmini rear cover lower shell sponge 2	1
	CN5003652	(00001-)	GMmini rear cover lower shell sponge 3	1
	CN5003653	(00001-)	GMmini rear cover lower shell sponge 4	1
	CN5003654	(00001-)	GMmini rear cover lower shell sponge 5	1
	CN5003655	(00001-)	GMmini rear cover lower shell sponge 6	1
	CN5003656	(00001-)	GMmini rear cover lower shell sponge 7	1
26	CN4000130	(00001-)	ST3.5*13 cross attack	3
27	CN4000365	(00001-)	M3 flat pad	3
28	CN5003751	(00001-)	Warning label for the maintenance	1
29	CN4000135	(00001-)	M5*12 pan head cross	9
30	CN5003617	(00001-)	GM110 sewage strainer	1
31	CN5002044	(00001-)	Strainer base, GM110	1
32	CN5002389	(00001-)	GMmini motor cover, GMmini motor cover	1
33	CN4000177	(00001-)	M6*10 flat cross	1
34	CN4000167	(00001-)	M6*20 flat cross	1
35	CN4000368	(00001-)	M5 flat pad, ¢5.3*¢10*0.8mm	9
36	CN4000404	(00001-)	The M5 play mat	9

TANQUE RECOLHIMENTO

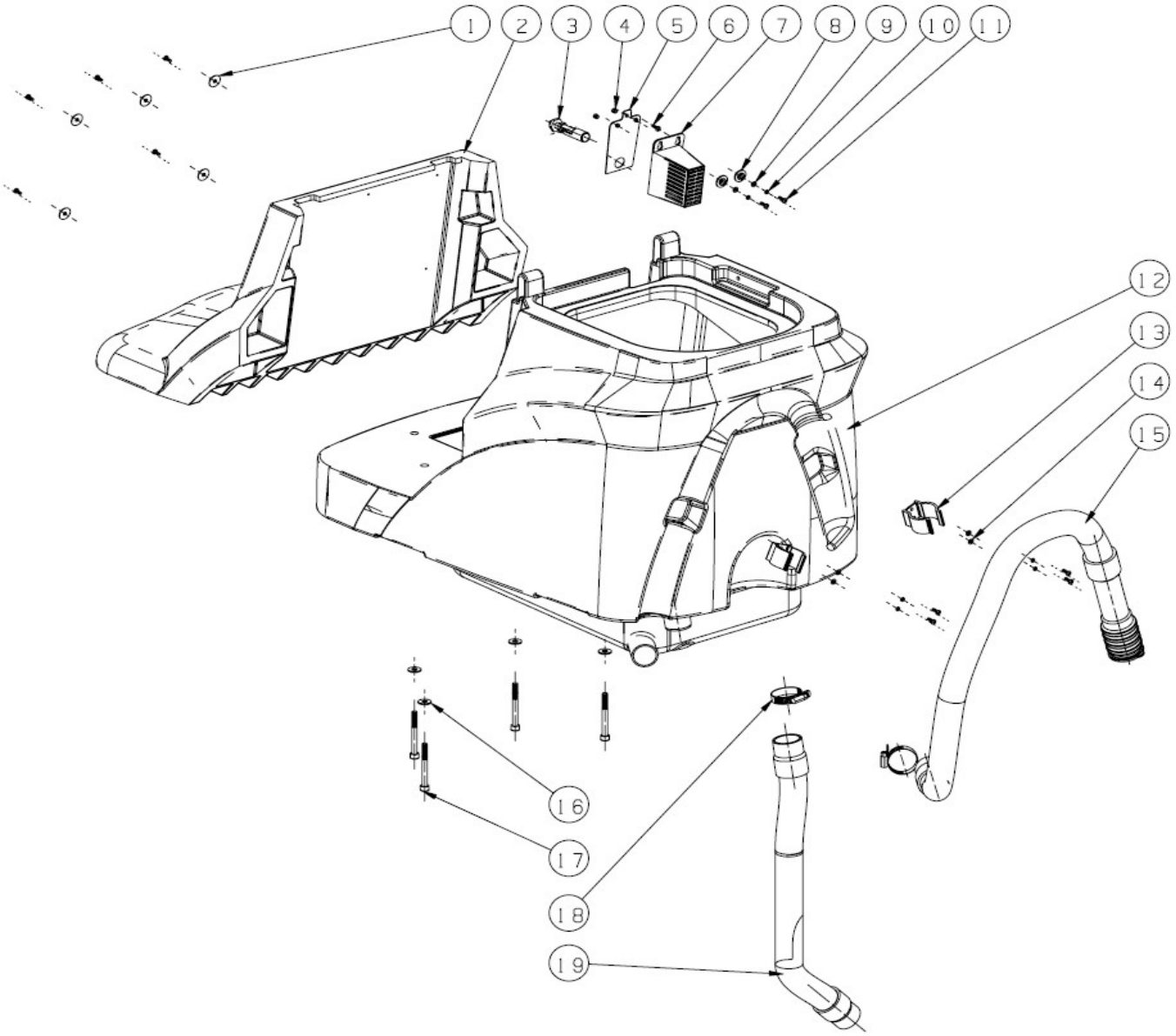

TANQUE RECOLHIMENTO

Ref	Código	Número de Série	Descrição	Qtd
1	CN5002017	(00001-)	Seat plastic cushion	5
2	CN5002265	(00001-)	GMmini seat (black)	1
3	CN5003090	(00001-)	GMmini sewage sensor harness assembly	1
4	CN4000440	(00001-)	M4 rivet nut 4X11	2
5	CN5000213	(00001-)	Sensor mounting plate, GM110	1
6	CN4000048	(00001-)	ST4*10 cross attack	1
7	CN5001931	(00001-)	GM50B sensor cover, material: ABS black	1
8	CN5002016	(00001-)	Pedal plastic pad	2
9	CN4000367	(00001-)	M4 increase the gasket	2
10	CN4000403	(00001-)	The M4 play mat	6
11	CN4000038	(00001-)	M4*12 large pan head cross	11
12	CN5002708	(00001-)	Mini sewage tank (gaomi grey)14kg	1
13	CN5001942	(00001-)	GM50B sewage pipe support	2
14	CN4000366	(00001-)	M4 flat pad, ¢4.3*¢9*0.8mm	4
15	CN5002833	(00001-)	GMmini/GM50B/GM70BT sewage pipe (black)	1
16	CN4000374	(00001-)	M8 increase the gasket, ¢8.4*¢20*1.5mm	4
17	CN4000131	(00001-)	M8 * 75 socket head	4
18	CN4000004	(00001-)	Ganizational 27-51 adjustable ear clamp	2
19	CN5002836	(00001-)	GM110 / GMmini suction tube	1

SUPORTE RODO

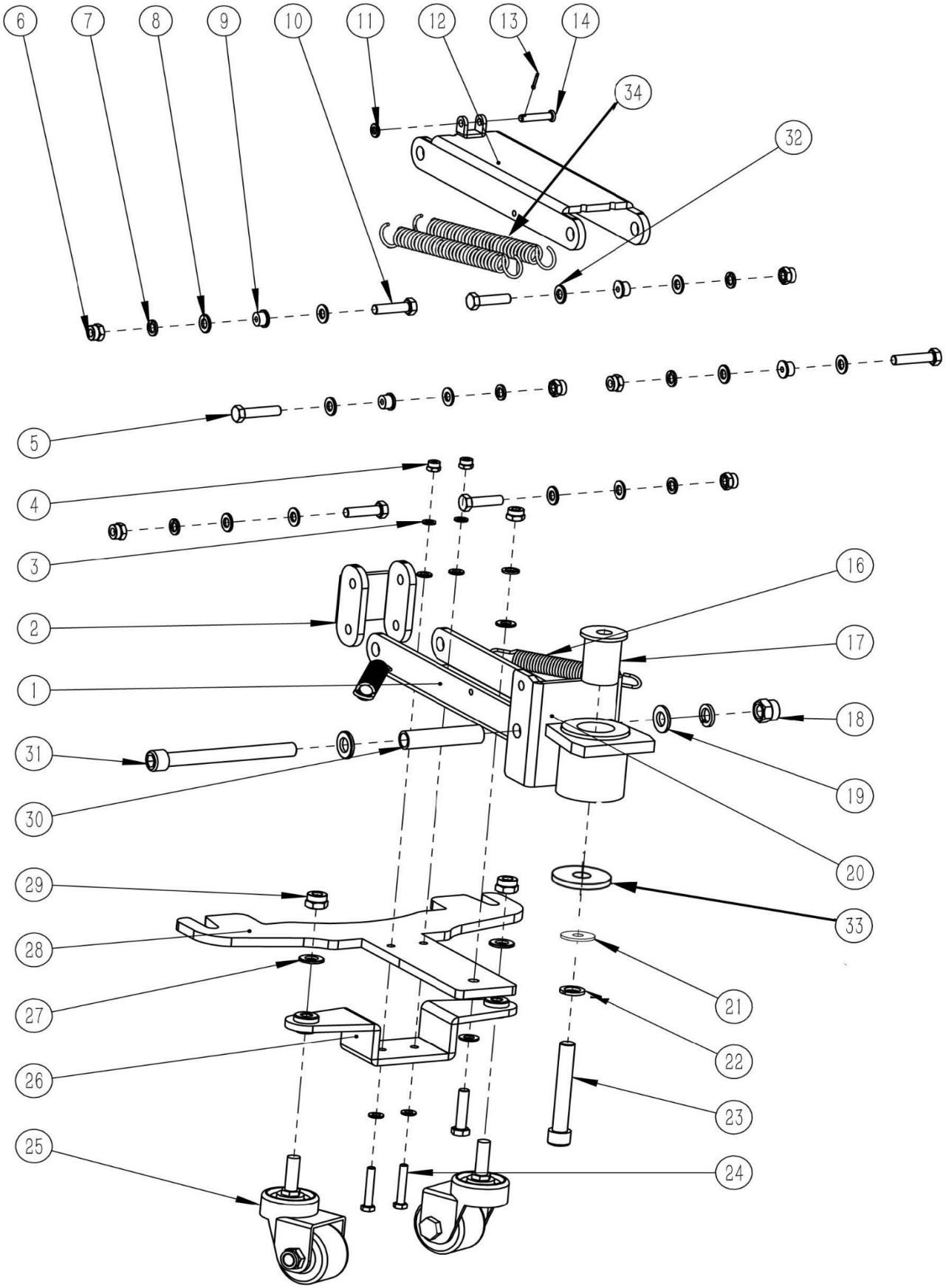

SUPORTE RODO

Ref	Código	Número de Série	Descrição	Qtd
1	CN5000321	(00001-)	GMmini pick - up joints welding parts	1
2	CN5000261	(00001-)	Grip-adjusting bracket, GM110	1
3	CN4000405	(00001-)	M6 play mat	2
4	CN4000328	(00001-)	M6 self-locking nut	2
5	CN4000094	(00001-)	M8 * 40 hex	2
6	CN4000330	(00001-)	M8 self-locking nut	7
7	CN4000406	(00001-)	M8 play mat	7
8	CN4000374	(00001-)	M8 increase the gasket, ¢8.4*¢20*1.5mm	6
9	CN5000796	(00001-)	GM50B motor connection copper bushing	6
10	CN4000090	(00001-)	M8 * 30 hex	5
11	CN4000370	(00001-)	M6 flat pad, ¢6.4*¢12*0.8mm	5
12	CN5000322	(00001-)	Mini sucker upper connector welding part	1
13	CN4000868	(00001-)	¢2X20, ¢2	1
14	CN4000866	(00001-)	Pin ¢6X25	1
15	CN5001006	(00001-)	Ganizational 42* ganizational 12.5*8.5mm	1
16	CN5001236	(00001-)	Mini steerage steering spring	2
17	CN5001004	(00001-)	Ganizational 42* ganizational 12.5*44mm	1
18	CN4000335	(00001-)	M12 self-locking nut	1
19	CN4000377	(00001-)	M12 stainless steel gasket	2
20	CN5001022	(00001-)	GM110 suction rotary shaft die casting	1
21	CN4000393	(00001-)	M12 increase the gasket, ¢12.5*¢37*3mm	1
22	CN4000408	(00001-)	M12 pad, stainless steel	2
23	CN4000211	(00001-)	M12 * 80 socket head	1
24	CN4000066	(00001-)	M6 * 30 hex	2
25	CN4000707	(00001-)	Sucker pressure adjust universal wheel	2
26	CN5000323	(00001-)	Welded parts of suction wheel universal	1
27	CN4000376	(00001-)	M10 gasket	2
28	CN5000212	(00001-)	Mini gripper plate, GMmini	1
29	CN4000333	(00001-)	M10 self-locking nut	2
30	CN5001005	(00001-)	Sucker connection copper sleeve	1
31	CN4000221	(00001-)	M12 * 120 socket head	1
32	CN4000373	(00001-)	M8 gasket, ¢8.4*¢16*1mm	8
33	CN5001003	(00001-)	Ganizational 42* ganizational 12.5*3mm	1
34	CN5001231	(00001-)	GM110 suction steering spring	2

RODO

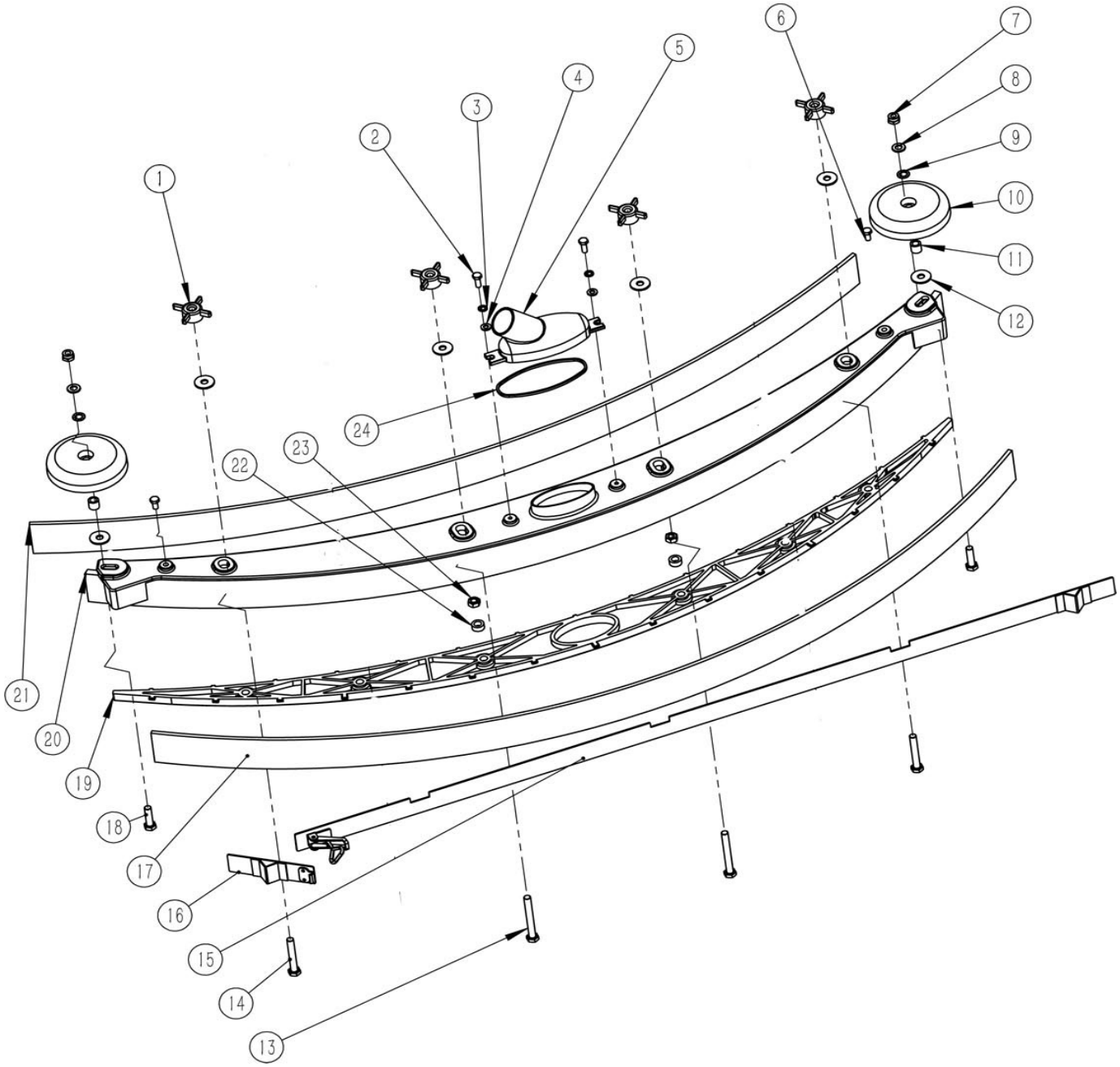

RODO

Ref	Código	Número de Série	Descrição	Qtd
1	CN5002058	(00001-)	M8 small square nut	6
2	CN4000065	(00001-)	M6 * 16 hex	2
3	CN4000405	(00001-)	M6 play mat	2
4	CN4000370	(00001-)	M6 flat pad, ¢ 6.4* ¢ 12*0.8mm	2
5	CN5002060	(00001-)	Suction outlet joint	1
6	CN4000068	(00001-)	M6 * 12 hex	2
7	CN4000330	(00001-)	M8 self-locking nut	2
8	CN4000373	(00001-)	M8 gasket, ¢ 8.4* ¢ 16*1mm	2
9	CN4000418	(00001-)	Ganizational 14 corrugated cushion	2
10	CN5001941	(00001-)	GM50B guide wheel, material: PA66 black	2
11	CN5000974	(00001-)	Suction wheel bushing, D	2
12	CN4000375	(00001-)	M8 extra-large gasket, ¢ 8.4* ¢ 24*2mm	8
13	CN4000208	(00001-)	M8 * 80 hex	2
14	CN4000190	(00001-)	M8 * 55 outside hexagon	4
15	CN5000300	(00001-)	Cast aluminum suction strip welding	1
16	CN5000299	(00001-)	Cast aluminum suction strip welding	1
17	CN5002304	(00001-)	Mini die-cast aluminum rubber D-1082B	1
18	CN4000090	(00001-)	M8 * 30 hex	2
19	CN5002072	(00001-)	110/70 suction plastic gland	1
20	CN5000984	(00001-)	Cast aluminum suction, die cast aluminum	1
21	CN5002305	(00001-)	Mini cast aluminum front D-1081B	1
22	CN5001001	(00001-)	Grilled suction cushion column	2
23	CN4000329	(00001-)	M8 nut	2
24	CN5002298	(00001-)	Suction outlet joint gasket	1

BATERIA 24V (CARREGADOR BATERIA)

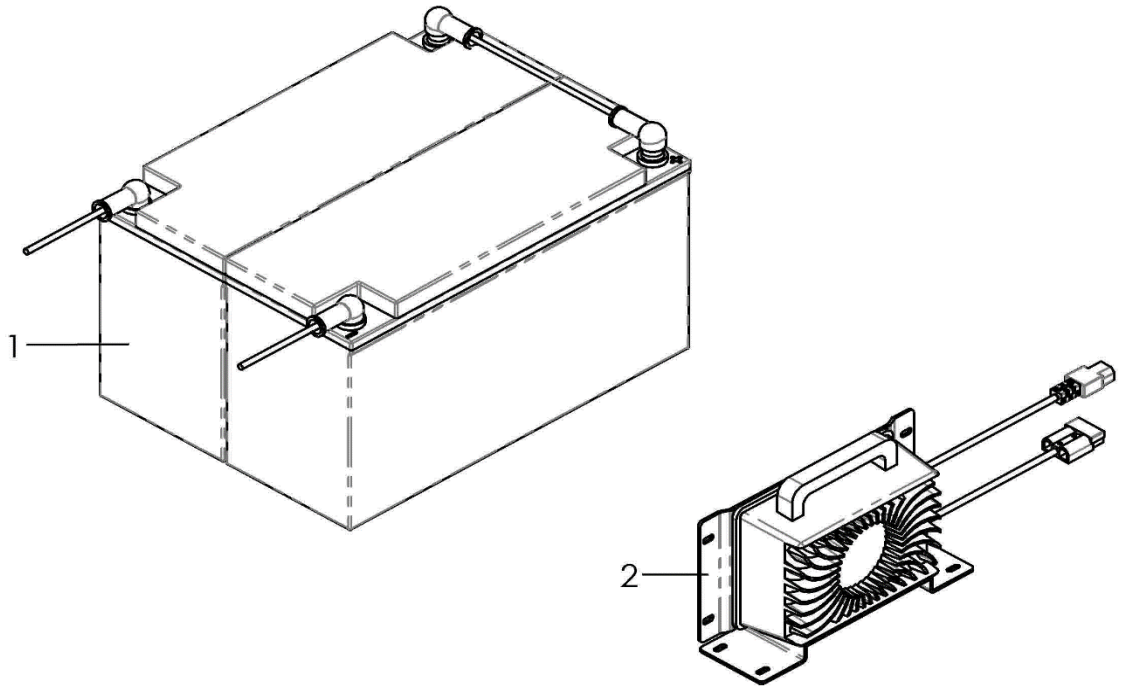

BATERIA 24V (CARREGADOR BATERIA)

Ref	Código	Número de Série	Descrição	Qtd
1	CN5002615	(00001-)	Bateria 12v 150ah A650	2
2	CN5002629	(00001-)	Carregador Bat 24v 25a A650/750	1

▽ CONJUNTO
▲ INCLUÍDAS EM UM CONJUNTO

ESQUEMA ELÉTRICO

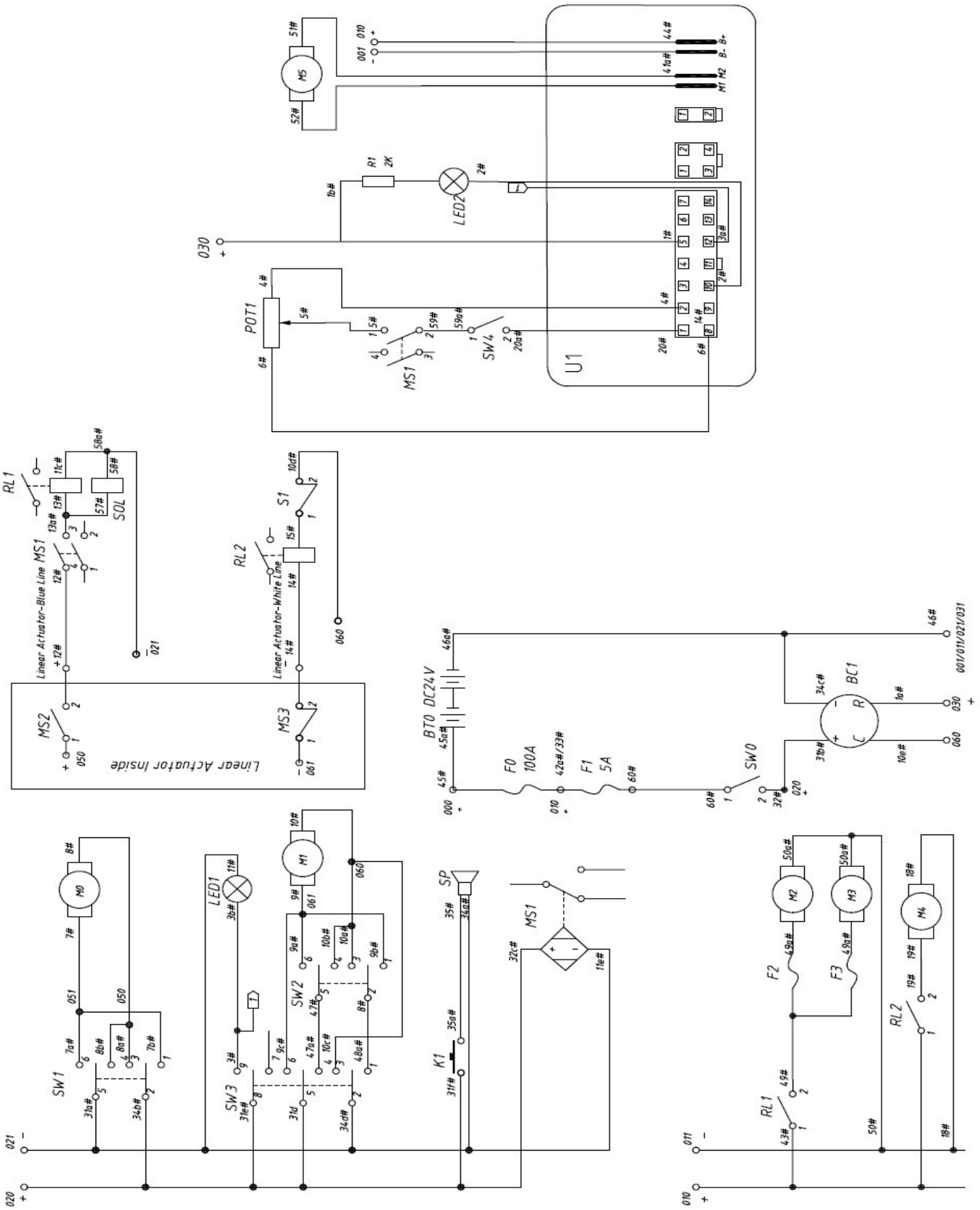

Rua Barão de Campinas, 715 - Cep.: 01201-902

Campos Elíseos, São Paulo, SP

Tel: (11) 3320-8550

Assist Tec: (11) 3320-8555

SAC: (11) 3320-8552

www.alfatennant.com.br